REV. 12/19

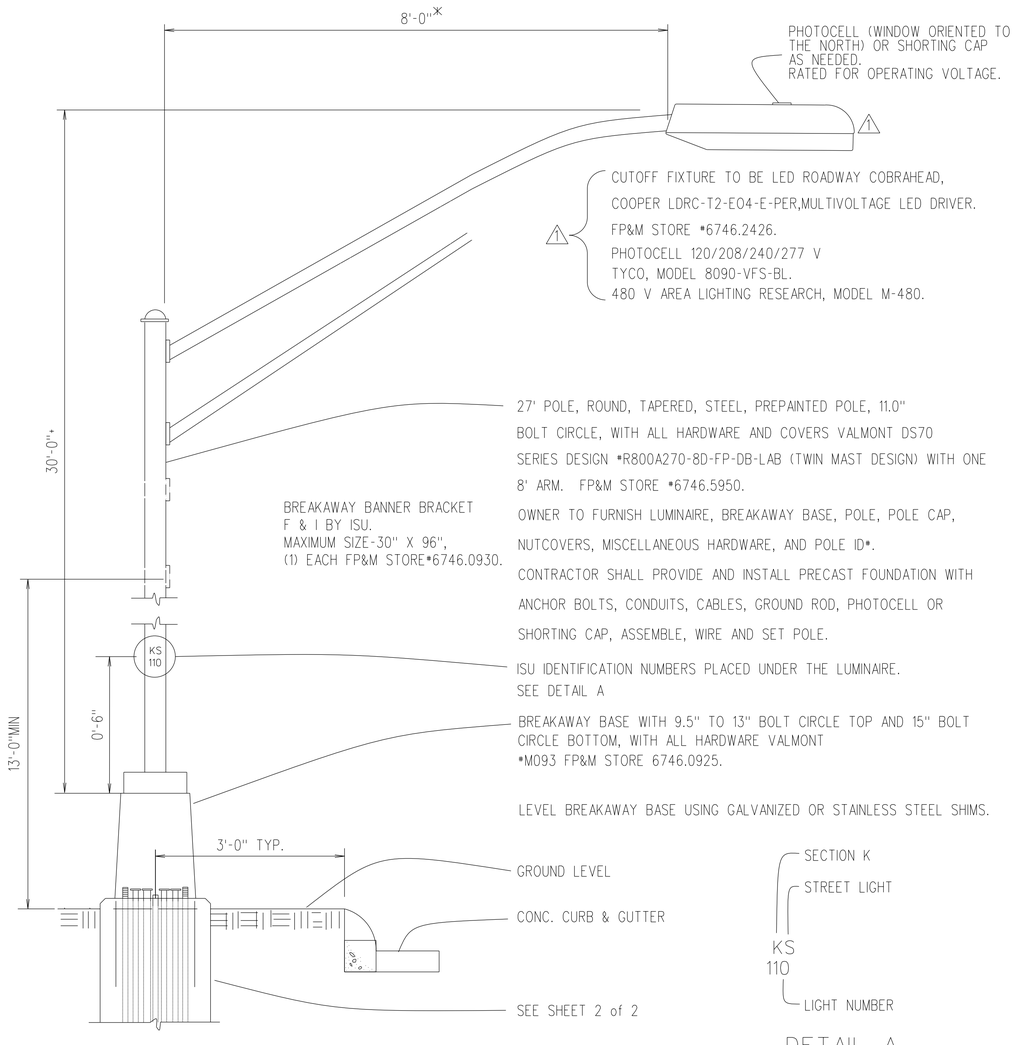

STREET LIGHT DETAIL

SECTION K
STREET LIGHT
KS
110
LIGHT NUMBER

DETAIL A

ISU ROADWAY LIGHTING - BANNER RATED

*POLE WITH 15'-0" ARM TO BE USED WITH ISU APPROVED FP&M STORE #6746.5955.

REV. 12/19

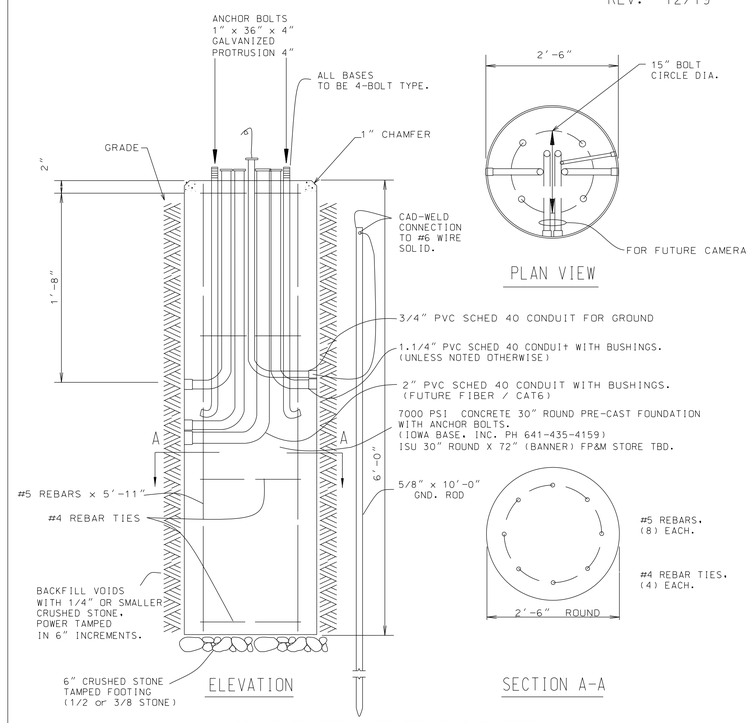

PLAN VIEW

ELEVATION

SECTION A-A

STANDARD PRE-CAST FOUNDATION DETAILS

NOTES:

1. CONTRACTOR TO SUPPLY AND INSTALL COMPLETE INSTALLATION.
2. TOTAL ESTIMATED WEIGHT = 4422 LBS.

ISU ROADWAY LIGHTING-BANNER RATED